CALIFORNIA BUILDING CODE

NONSTRUCTURAL DESIGN REQUIREMENTS

This section contains portions of the California Building Code that relate to basic minimum nonstructural design requirements for a residence.

EMERGENCY ESCAPE WINDOWS

Basements in dwelling units and every sleeping room below the fourth story shall have at least one operable window or door approved for emergency escape or rescue that shall open directly into a public street, public alley, yard or exit court. The door or window shall be operable from the inside to provide a full clear opening without the use of separate tools.

All escape or rescue windows shall have a minimum net clear openable area of 5.7 square feet. The minimum net clear openable height dimension shall be twenty-four inches. The minimum net clear openable width dimension shall be twenty inches. When windows are provided as a means of escape or rescue they shall have a finished sill height not more than forty-four inches above the floor. This measurement is taken from the floor to the clear opening of the window, not the lower window sill. The minimum net clear opening can be 5.0 square feet for grade-floor openings.

Formula for calculating openable area: **Height x Width (in inches) ÷ 144 = _____ sq. ft.**

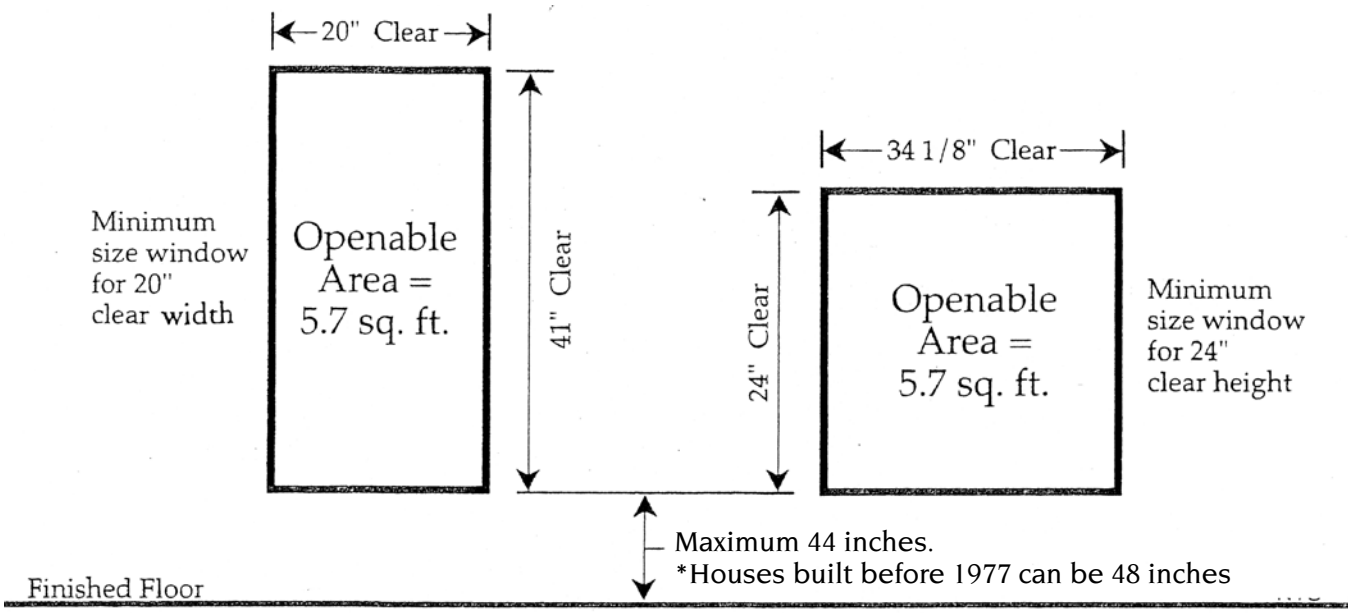

Minimum Width and Height Requirements for Emergency Escape and Rescue Windows:

Width	20	20.5	21.5	21.5	22	22.5	23	23.5	24	24.5	25	25.5	26	26.5	27
Height	41	40	39.1	38.2	37.3	36.5	35.7	34.9	34.2	33.5	32.8	32.2	31.6	31	30.4
Width	27.5	28	28.5	29	29.5	30	30.5	31	31.5	32	32.5	33	33.5	34	34.2
Height	29.8	29.3	28.8	28.3	27.8	27.4	26.9	26.5	26.1	25.7	25.3	24.9	24.5	24.1	24

LIGHT, VENTILATION AND SANITATION

All habitable rooms shall have a glazing area of not less than 8 percent of the floor area. Natural ventilation shall be through windows, doors, louvers or other approved openings to outdoor air. The minimum openable area to the outdoors shall be 4 percent of the floor area being ventilated.

Adjoining rooms. For the purpose of determining light and ventilation requirements, any room shall be considered as a portion of an adjoining room when at least one-half of the area of the common wall is open and unobstructed and provides an opening of not less than one-tenth of the floor area of the interior room but not less than 25 square feet.

Bathrooms. Bathrooms, water closet compartments and other similar rooms shall be provided with glazing area of not less than 3 square feet, one-half of which must be openable. (E*xception*) The glazed area shall not be required where artificial light and a mechanical ventilation system are provided.

Required heating. Every dwelling unit shall be provided with heating facilities capable of maintaining a minimum room temperature of 68 degrees.

CEILING HEIGHTS

Minimum height. Habitable space, hallways, bathrooms, laundry rooms shall have a ceiling height of not less than 7 feet.

ROOM AREA

Dwelling units and congregate residences shall have at least one room that is at least 120 square feet in area. Other habitable rooms, except kitchens, must have a minimum area of at least 70 square feet.

WIDTH

No habitable room, other than a kitchen, may be less than seven feet in any dimension. Alcoves and entryways having dimensions less than seven feet are allowed within rooms but cannot be included when calculating the minimum area of the room. Kitchens shall have a clear passageway of not less than three feet between counters fronts and walls.

SMOKE ALARMS / CARBON MONOXIDE ALARMS

Smoke Alarms. Dwelling units and sleeping units shall be provided with smoke alarms. Alarms shall be installed in accordance with the manufacturer's installation instructions. An alarm shall be installed in each sleeping room and at a point centrally located to the area giving access to each separate sleeping room. When the dwelling has more than one story, an alarm shall be installed on each story. When sleeping rooms are on an upper level, the alarm shall be placed at the ceiling of the upper level in close proximity to the stairway.

Carbon Monoxide Alarms. An approved carbon monoxide alarm shall be installed in dwelling units and in sleeping units within which fuel-burning appliances are installed and in dwelling units that have attached garages. The carbon monoxide alarm shall be installed outside of sleeping areas in the immediate vicinity of the bedrooms and on every level.

Power Source. For new construction, required alarms shall receive their primary power from the building wiring and shall be equipped with a battery backup. The alarm shall emit a signal when the batteries are low. Alarms may be solely battery operated when installed in existing buildings.

Interconnection. Where more than one hard wired alarm is required to be installed, the alarms shall be interconnected in a manner that activivation of one alarm will activate all of the alarms.

ATTACHED GARAGES

The private garage shall be separated from the dwelling unit and its attic area by means of a minimum 1/2-inch gypsum board applied to the garage side. Garages beneath habitable rooms shall be separated with 5/8-inch type X gypsum for ceilings. Doors between a private garage and the dwelling shall be either solid wood doors or honeycomb core steel doors not less than 1 3/8 inches thick. No openings from a garage directly into a room used for sleeping purposes allowed. Doors shall be self-closing and self-latching. Ducts in private garage and ducts penetrating the walls or ceilings separating the dwelling unit from the garage shall be constructed of a minimum 0.019-inch sheet steel (26 gage steel) and shall have no openings into garage. Fire dampers can no longer be used as a means of installing flex duct in exposed areas of garage.

Garage floor surfaces shall be of approved noncombustible material. The area of floor used for parking vehicles shall be sloped to facilitate the movement of liquids to a drain or toward the main vehicle entry doorway.

ATTACHED CARPORTS

An occupancy separation need not be provided between a residence and a carport having no enclosed uses above, provided the carport is entirely open on two or more sides.

DETACHED GARAGES AND ACCESSORY BUILDINGS

Any structure less than three feet from a property line must have a one hour fire wall along that side and no openings (windows, doors, etc.) are permitted in this wall. Detached structures must be a minimum of six feet from any other structure. This distance is measured from face of support to face of support.

City Planning and Building Divisions criteria are considered when deciding how close you can build to a property line. Building setback lines may require greater distances from property lines than California Building Code regulations allow.

An accessory structure less than 120 square feet does not require a permit provided that it meets all requirements listed:

- Lot coverage and setback requirements apply to all accessory structures.
- The maximum height of any accessory structure is 9 feet for walls and 14 feet maximum roof peak height.
- Only one accessory structure not requiring a permit can be located on a property.
- Electrical and plumbing permits are required regardless of the size of the structure.

WINDOW AND DOOR REPLACEMENT

A building permit is required for the installation or replacement of any window or patio door. Replacement of broken glass does not require a building permit. All new windows and doors must meet current Building and Energy Code requirements. Windows and doors shall be installed and flashed in accordance with the manufacture's installation instructions. The written installation instructions provided by manufacturer are to be available for the inspector at the time of inspection.

WINDOW SILL HEIGHT

Where the opening portion of an openable window is located more than 72" above the exterior finish grade (usually windows above first level) the window must be at least 24" above interior finished floor of the room, or the openable section of window shall not allow passage of a 4" sphere. (*Exception*) Openings that are provided with approved fall prevention devices or limiting devices would be allowed.

GLAZING HAZARDOUS LOCATIONS

These areas require safety glazing that meets code requirements for human impact and identification.

1. Glazing in all fixed and operable panels of swinging, sliding and bifold doors.
   (Exceptions: Glazed openings less than 3"- Decorative glazing)

2. Glazing in an individual fixed or operable panel adjacent to a door where the nearest vertical edge is within a 24" arc of the door in a closed position and bottom edge is less than 60" above the floor.
   (*Exceptions: Decorative glazing – Where there is a permanent barrier between the door and the glazing – Glazing in walls on the latch side of and perpendicular to the plane of the door in the closed position*)

3. Glazing in an individual fixed or operable panel that meets all of the following conditions: The exposed area of an individual pane is larger than 9 square feet, and the bottom edge of the glazing is less than 18 inches above the floor, and the top edge of the glazing is more than 36 inches above the floor, and walking surface is within 36 inches of glazing.

4. All glazing in railings regardless of area or height above walking surface.

5. Glazing in enclosures for or walls facing hot tubs, whirlpools, saunas, steam rooms, bathtubs and showers where the exposed edge of the glazing is less than 60 inches above any standing or walking surface.
   (*Exceptions: Glazing that is more than 60 inches from the waters edge of a hot tub, whirlpool or bathtub*)

6. Glazing in walls and fences adjacent to indoor and outdoor swimming pools, hot tubs and spas where the bottom edge of the glazing is less than 60 inches above a walking surface and within 60 inches of the water's edge.

7. Glazing adjacent to stairways, landings and ramps within 36 inches of a walking surface when the exposed surface of the glazing is less than 60 inches above walking surface.

8. Glazing adjacent to stairways within 60 inches horizontally of the bottom tread of a stairway in any direction when the exposed surface of the glazing is less than 60 inches above the nose of the tread.

STAIRWAYS AND LANDINGS

Private stairways shall be a minimum of 36 inches wide. Trim and handrails may not encroach into this minimum width by more than 4 1/2 inches. The maximum rise of each step is 7 3/4 inches, the minimum rise is 4 inches. The minimum run is 10 inches. If there is no nosing minimum tread depth is 11 inches. The largest tread width or riser height in any flight of stairs shall not exceed the smallest by more than 3/8 inch. A nosing not less than 3/4 inch but not more than 1 1/4 inches shall be provided on stairways with solid risers where the tread depth is less than 11 inches. The radius or bevel at the leading edge of the stair tread shall be 1/2 inch maximum.

For residential stairs, open risers are permitted, provided that the opening between treads does not permit the passage of a 4-inch diameter sphere.

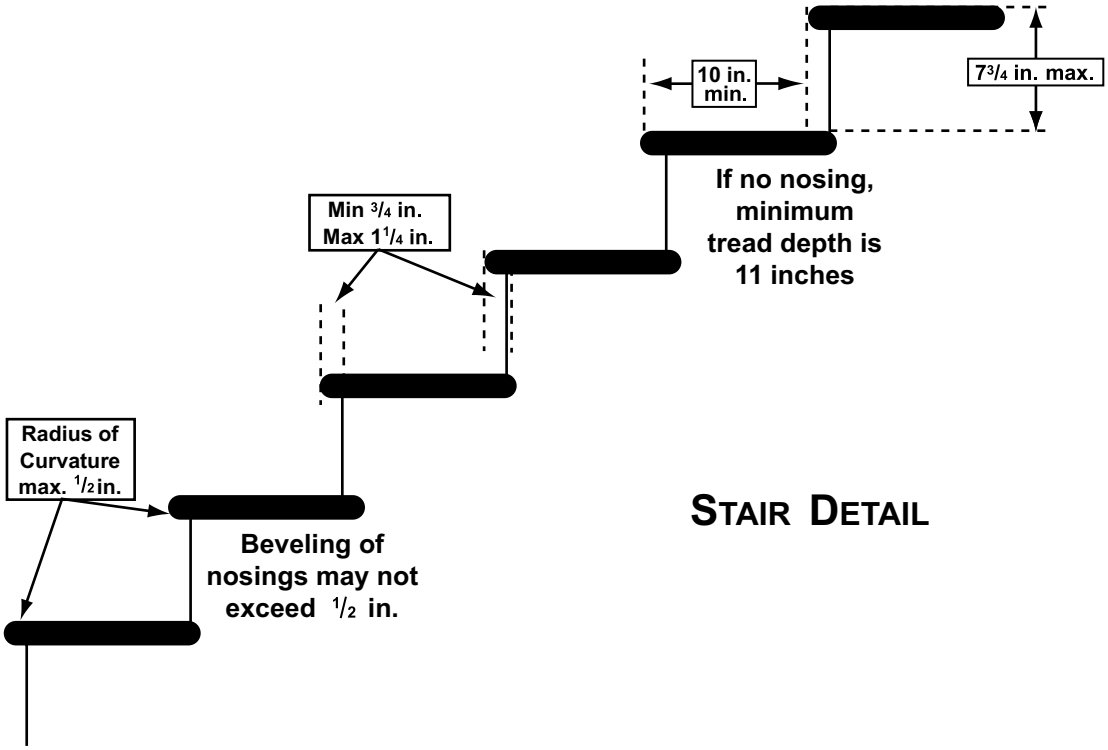

STAIR DETAIL

Every stairway must have a headroom clearance of not less than 6'8" measured vertically from the tread nosing to the horizontal plane above.

Enclosed useable space under stairs must be protected on the enclosed side by 1-hour fire rated construction.

Landings must have a width and a dimension measured in the direction of travel not less than the width of the stairway. Doors in the fully open position shall not reduce a required dimension by more than 7 inches.

The main exterior door shall have a landing immediately on the exterior side. These landings shall be as wide as the door and a minimum of 36 inches in the direction of travel. These landings must be no more than 7 3/4 inches below the interior floor level.

An **interior** door at the top of a flight of stairs need not have a landing at the top of the stairs, provided the door swings away from the stairs.

HANDRAILS

The intent of a handrail is to provide a handgrip for people using a stairway. Stairways, which serve an individual dwelling unit, must have a handrail on one side if they have four risers or more. Handrails projecting from a wall shall have not less than 1 1/2 inches between the wall and handrail. Handrails must be placed between 34 and 38 inches above the nosing of the stair treads. Ends must be returned or have rounded terminations or bends. The handgrip portion of handrails shall not be less than 1 1/4 inches nor more than 2 inches in cross-sectional dimension or the shape shall provide an equivalent gripping surface. The handgrip portion of handrails shall have a smooth surface with no sharp corners.

Handrails that are not circular must have a perimeter of 4 inches minimum and 6 1/4 inches maximum with a maximum cross-section dimension of 2 1/4 inches.

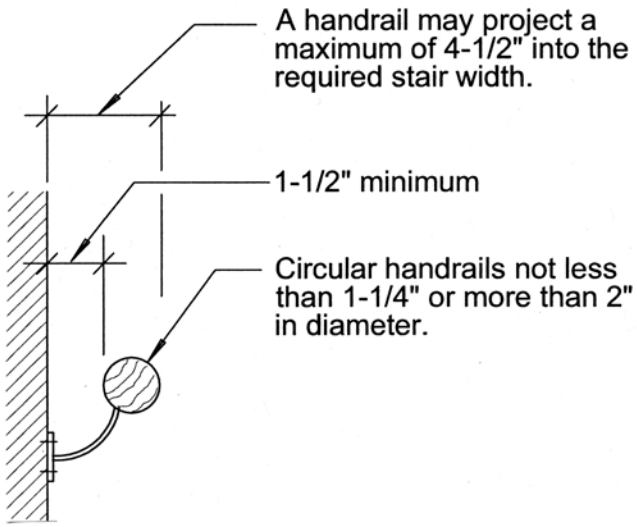

Handrail that is not circular must have a perimeter of 4 in. min & 6¼ max with a max cross-section dimension of 2¼ in.

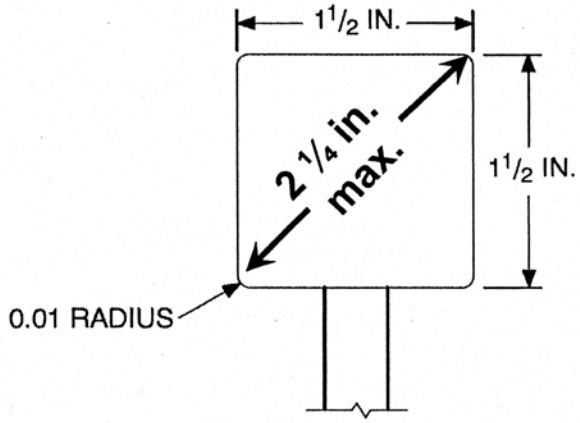

NONCIRCULAR HANDRAIL

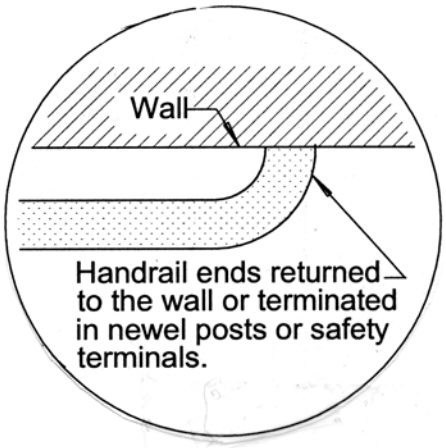

GUARDS

The intent of a guardrail is to prevent people, particularly small children, from falling off the edge of a horizontal standing surface. Guards shall protect open sides of stairways, landings, ramps, balconies, decks, or porches, which are more than 30 inches above grade or the floor below.

The top of residential guardrails must be at least 42 inches above the upper standing surface. Guardrails must have intermediate rails or an ornamental pattern placed in such a manner that a sphere 4 inches in diameter cannot pass through. The triangular openings formed by the riser, tread and bottom element of a guardrail at the open side of a stairway may be of such size that a sphere 6 inches in diameter cannot pass through. Openings for required guards on the sides of stair treads shall not allow a sphere of 4 3/8 inches to pass through.

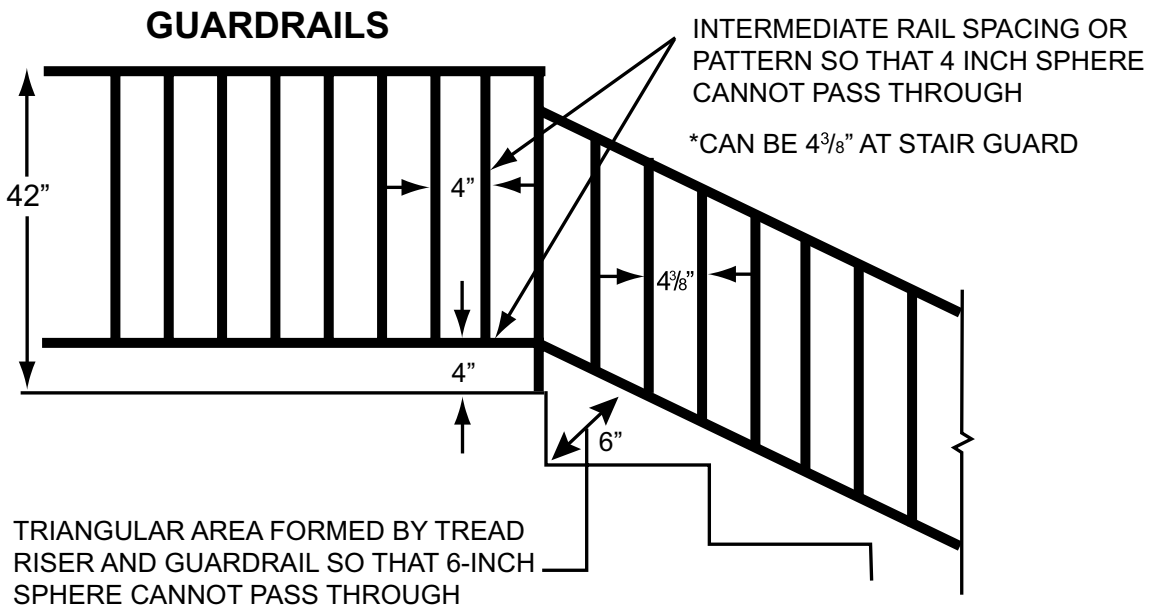

FOOTINGS AND FOUNDATIONS

Prior to pouring any concrete, the bottom of the footings must be cleaned out, removing any loose soil, wood, or debris. Roots must also be removed. All reinforcing steel must be held away from contact to soil or forms. (Note: The use of steel bars driven into the ground to support rebar is prohibited.) 3 inches of clearance is required from reinforcing bars to sides and bottom of earth-formed footings, and 1 1/2 inches clearance is required from #5 and smaller reinforcing bars to forms.

Wood forms located in the ground, or between the foundation sills and the ground, must be removed after pouring concrete.

Reinforcing steel when spliced must have a minimum lap of twenty inches for #4 (1/2 inch) bars and twenty-five inches for #5 (5/8 inch) bars. Where a new footing intersects an existing footing the new reinforcing must be doweled at least six inches into the existing footing.

FOUNDATIONS

All exterior footings shall be at least 12 inches below undisturbed ground surface. Foundations with stem walls shall have a minimum of one #4 bar within 12 inches of the top of wall and one #4 bar located 3 to 4 inches from bottom of footing. Slabs on ground with turned down footings shall have a minimum of one #4 bar at the top and the bottom of footing.

SLABS ON GRADE

Concrete slabs supported directly on the ground may not be less than 3 1/2 inches thick. A continuous footing is required; see foundation details for examples. Any reinforcement in slabs on grade must have two inches of clearance from soil. A vapor barrier of six-mill polyethylene with any joints lapped 6 inches minimum is required for habitable space.

SURFACE DRAINAGE

Surface drainage shall be diverted to a storm drain or an area tha can absorb the water. Lots shall be graded to drain surface water away from foundation walls. The slope away from foundation should be 6-inches minimum within the first 10-feet. Where it is not possible to obtain minimum slope, drains, or swales shall be constructed to ensure drainage away from structure.

Impervious surfaces within 10-feet if the building foundation shall be sloped a minimum of 2-percent away from the building.

FOUNDATION DRAINAGE

Drains shall be provided around all foundations that retain earth and enclose any usable space located below grade. An approved system shall be installed in the area to be protected and shall discharge by gravity or mechanical means into an approved drainage system.

FOUNDATION WATERPROOFING AND DAMPPROOFING

Exterior foundation walls that retain earth and enclose interior spaces and floors below grade shall be waterproofed in accordance with a system approved by the building code.

TYPICAL RESIDENTIAL FOUNDATIONS DETAILS

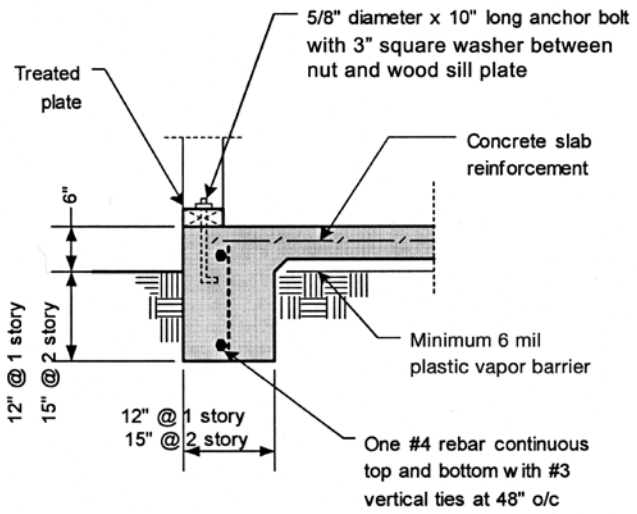

Typical Footing - Concrete Floor

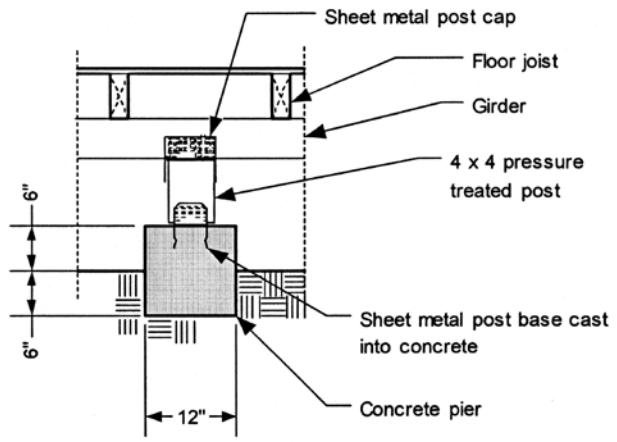

Typical Pier - Raised Wood Floor

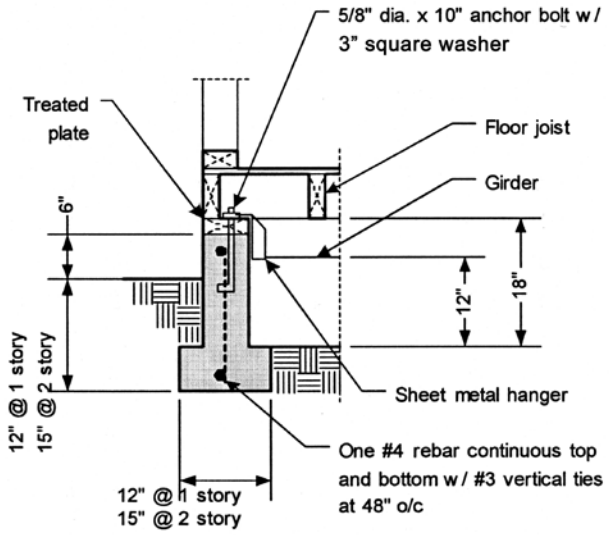

Typical Footing - Raised Wood Floor

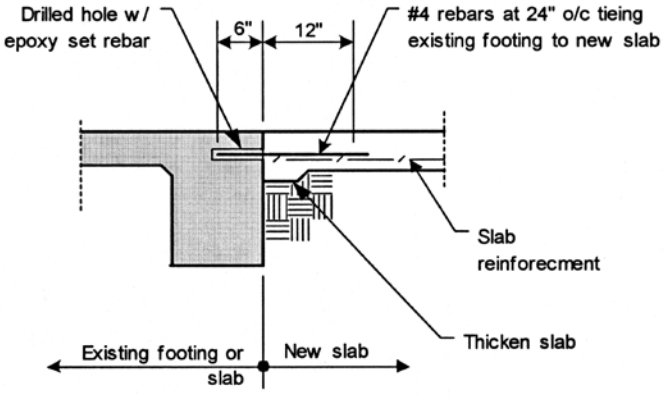

Existing to New Concrete Slab Tie

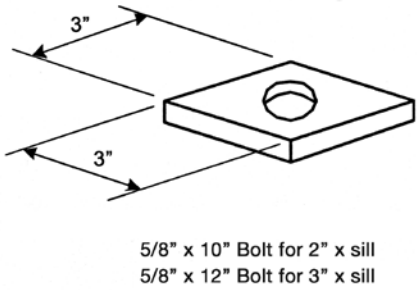

Anchor Bolt Washer Dimensions

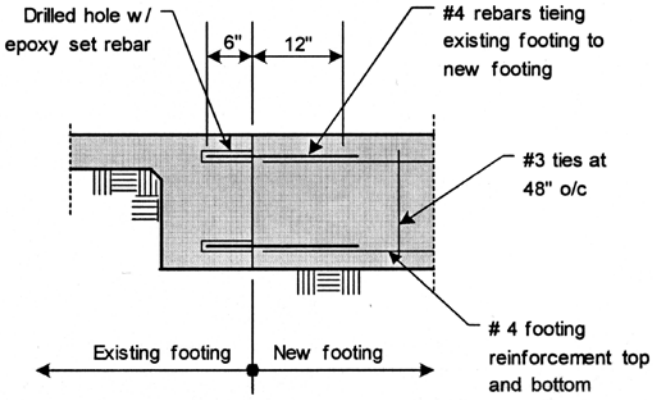

Existing to New Concrete Footing

FLOOR JOISTS, GIRDERS AND POSTS

For details on attachment of the mudsill to the foundation, see the section on SILL PLATES under **WALL FRAMING.**

When wood floor joists or the bottom of wood structural floors without joists are located closer than 18 inches or wood girders are located closer than 12 inches to exposed ground, the floor assembly, including posts, girders, joists, and subfloor, shall be pressure treated wood.

The bottoms of posts supporting girders must be at least 6 inches above earth unless they are pressure treated. This is usually done with piers.

Girder splices must occur over posts and must be provided with an adequate tie, such a metal bracket or strap.

The ends of each joist shall have at least 1 1/2 inches of bearing on wood or metal. Where joists bear directly on concrete or masonry, they must have at least 3 inches of bearing.

Solid 2X nominal blocking is required at ends of joists and over all bearing points. Blocking may be omitted where ends of joists are nailed to a header or rim joist.

Joists framing from opposite sides of a beam, girder or partition shall be lapped at least three inches or the opposing joists shall be tied together in an approved manner. Blocking does not meet this requirement.

Notches on ends of joists must not exceed 1/4 the depth of the joist. Other notches in the top or bottom of joists must not exceed 1/6 the joist depth and must not be located in the middle 1/3 of the joist span.

Holes bored in joists must not be within two inches of the top or bottom and the diameter must not exceed 1/3 of the joist depth.

Trimmer and header joists at openings must be doubled when the header span exceeds 4 feet.

UNDERFLOOR VENTILATION AND ACCESS

Underfloor areas must be ventilated by openings in the exterior foundation walls. The openings must have a net area of 1 square foot for each 150 square feet of under floor area and should be located to provide cross ventilation. Openings must be screened with corrosion resistant wire mesh with openings of 1/8-inch minimum. All underfloor areas must have an access opening at least 18" x 24". Ducts and other obstructions cannot block access to any portion of the under floor area.

PLYWOOD SUBFLOORING

Plywood floor nailing is required to be 6 inches on center on all edges and 12 inches on center on intermediate supports. The thickness of plywood will be determined by your joist spacing and the panel identification index of plywood selected for use. All plywood flooring edges must have tongue and groove joints or be supported with blocking.

WALL FRAMING

SILL PLATES

Studs shall have full bearing on a plate or sill not less than 2 inches in nominal thickness and having a width not less than that of the wall studs.

Exterior sill plates bearing on concrete must be pressure treated lumber. Foundation plates or sills bearing on concrete foundations shall be bolted to foundation with a minimum of 10 inch long steel bolts embedded at least 7 inches into the concrete. Bolts must not be spaced over 6 feet apart. A minimum of two bolts are required per piece. Bolts must be located no more than 12 inches and no less than 4 inches from each end of each piece. Each bolt must have a 3" x 3" square washer under the nut.

STUDS

The size, height and spacing of studs shall be in accordance. Studs shall be placed with their wide dimension perpendicular to the wall. At least three studs need to be installed at each corner of an exterior wall.

SIZE, HEIGHT AND SPACING OF WOOD STUDS[a]

STUD SIZE (inches)	BEARING WALLS					NONBEARING WALLS	
	Laterally unsupported stud height[a] (feet)	Maximum spacing when supporting a roof-ceiling assembly or a habitable attic assembly, only (inches)	Maximum spacing when supporting one floor, plus a roof-ceiling assembly or a habitable attic assembly (inches)	Maximum spacing when supporting two floors, plus a roof-ceiling assembly or a habitable attic assembly (inches)	Maximum spacing when supporting one floor height[a] (feet)	Laterally unsupported stud height[a] (feet)	Maximum spacing (inches)
		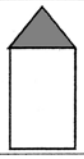	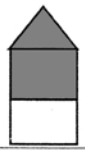	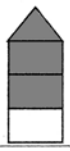			
2 × 3[b]	—	—	—	—	—	10	16
2 × 4	10	24[c]	16[c]	—	24	14	24
3 × 4	10	24	24	16	24	14	24
2 × 5	10	24	24	—	24	16	24
2 × 6	10	24	24	16	24	20	24

For SI: 1 inch = 25.4 mm, 1 foot = 304.8 mm, 1 square foot = 0.093 m^2.

a. Listed heights are distances between points of lateral support placed perpendicular to the plane of the wall. Increases in unsupported height are permitted where justified by analysis.

b. Shall not be used in exterior walls.

c. A habitable attic assembly supported by 2 × 4 studs is limited to a roof span of 32 feet. Where the roof span exceeds 32 feet, the wall studs shall be increased to 2 × 6 or the studs shall be designed in accordance with accepted engineering practice.

TOP PLATES

Bearing and exterior wall studs shall be capped with a double top plate installed to provide overlapping at corners and intersections with other walls. End joints in double top plates must be offset by at least 4 feet and the lap must be nailed together with at least 8 – 16d nails.

CRIPPLE WALLS

Foundation cripple walls shall be framed of studs not less in size than the studding above with a minimum length of 14 inches, or shall be framed with solid blocking. For seismic category D or E, cripple walls having a stud height exceeding 14 inches shall be considered a story and shall be braced as required for braced wall lines in accordance with table 2308.12.4

FIRE BLOCKING

Fire blocking is required in all stud walls at ceilings and floor levels. The vertical distance between blocking shall not exceed ten feet. It is also required where a ceiling is below the top plate of the wall such as soffit ceilings, and around the edges of tubs and showers on wood floors. Holes for pipes that pass from one floor level to another or into an attic space must have the openings fire stopped with non-combustible material. Where insulation batts are used as fire blocking between studs, they must be stapled in place.

STRUCTURAL WOOD PANEL WALL SHEATHING

Nails or other approved fasteners shall be driven flush but shall not fracture the surface of the structural wood panel. If more than 20% of the fasteners are over driven by more than 1/8", additional fasteners shall be driven to maintain the required shear capacity. If the condition of close nailing pattern does not allow for additional fasteners without concern of splitting framing members, the engineer of record shall be required to provide a wet stamped letter with specific directions for correction.

Nails shall be placed not less than 3/8" in from the panel edge, shall be spaced six inches on center along panel edge, some shearwalls required tighter nail spacing.

Framing members or blocking shall be provided at the edges for all Braced Wall Panels and shearwalls.

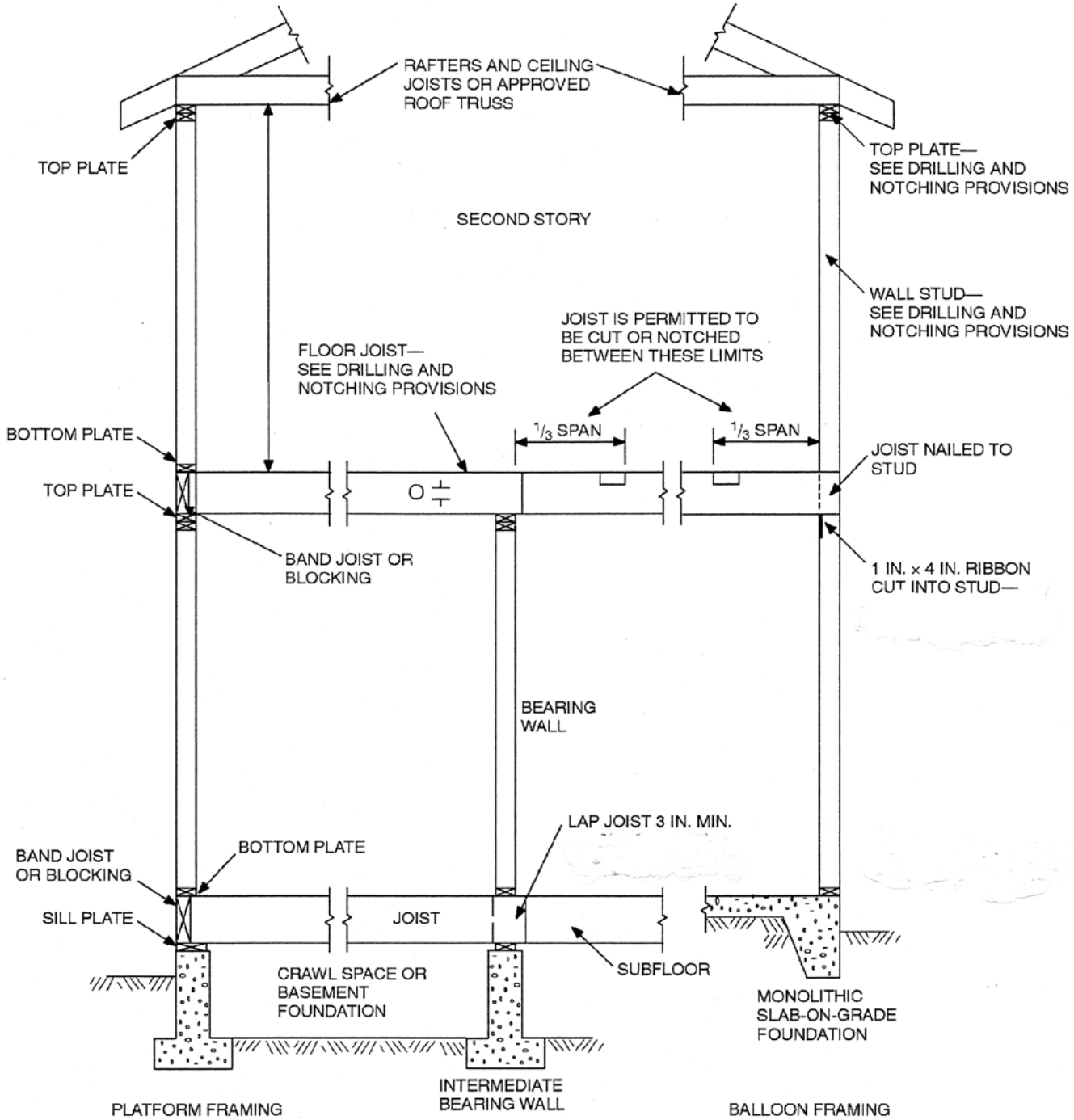

TYPICAL WALL, FLOOR AND ROOF FRAMING

NOTCHING, CUTTING, AND BORING GUIDE

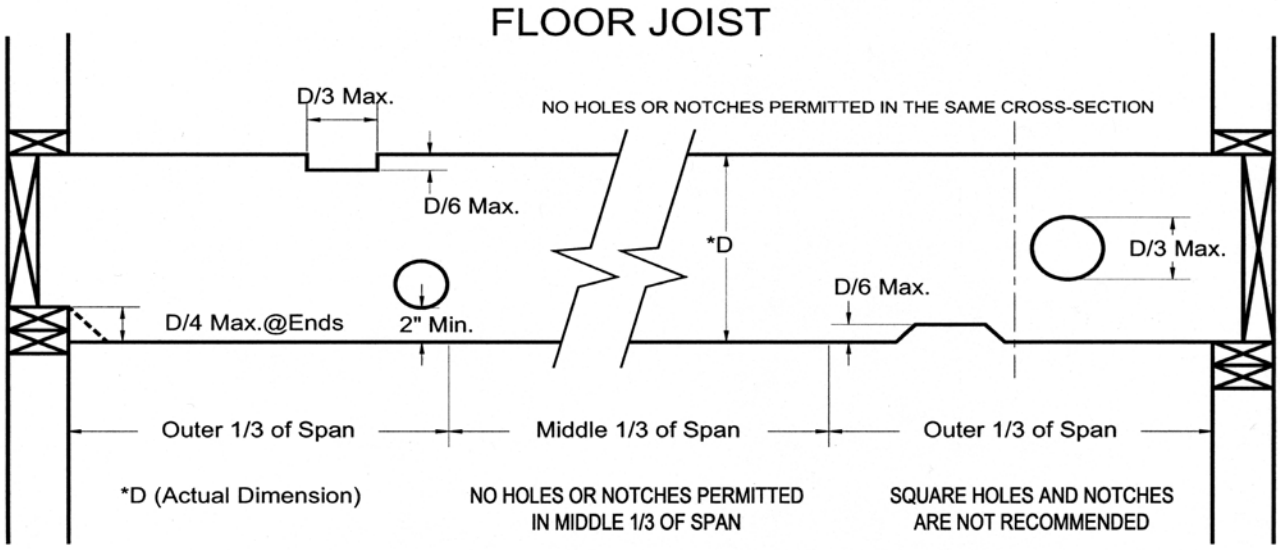

CUTS, NOTCHES AND BORED HOLES FOR PIPING

Where plumbing, heating or other pipes are run through the top or bottom plates of walls and these plates are cut partially or totally through, they must have a 1 1/2" wide 16 gauge metal tie fastened across them with six 16d nails on each side of the opening. Studs in exterior walls and bearing walls must not be cut or notched more than 25 percent of their width (i.e., 7/8" for 2 x 4's or 1 3/8" for 2 x 6's). Cutting or notching up to forty percent of stud width is permitted in non-bearing partitions.

A bored hole not exceeding forty percent of the stud width (i.e., 1 3/8" for a 2 x 4 or 2 1/4" for a 2 x 6) may be made in any stud provided the edge of the hole is no nearer to the face of the stud than 5/8". If holes up to sixty percent of the width of the stud are made, the wall studs must be doubled, and no more than two successive studs can be bored. Holes up to sixty percent of the stud width can be made in non-bearing walls without doubling (i.e., 2 1/8" for a 2 x 4, and 3 1/4" for a 2 x 6).

Joist Size	Max. Hole	Max. Notch Depth	Max. End Notch
2x4	NONE	NONE	NONE
2X6	1-1/2"	7/8"	1-3/8"
2X8	2-3/8"	1-1/4"	1-7/8"
2X10	3"	1-1/2"	2-3/8"
2X12	3-3/4"	1-7/8"	2-7/8"

NOTCHING AND BORED HOLE LIMITATIONS FOR EXTERIOR WALLS AND BEARING WALLS

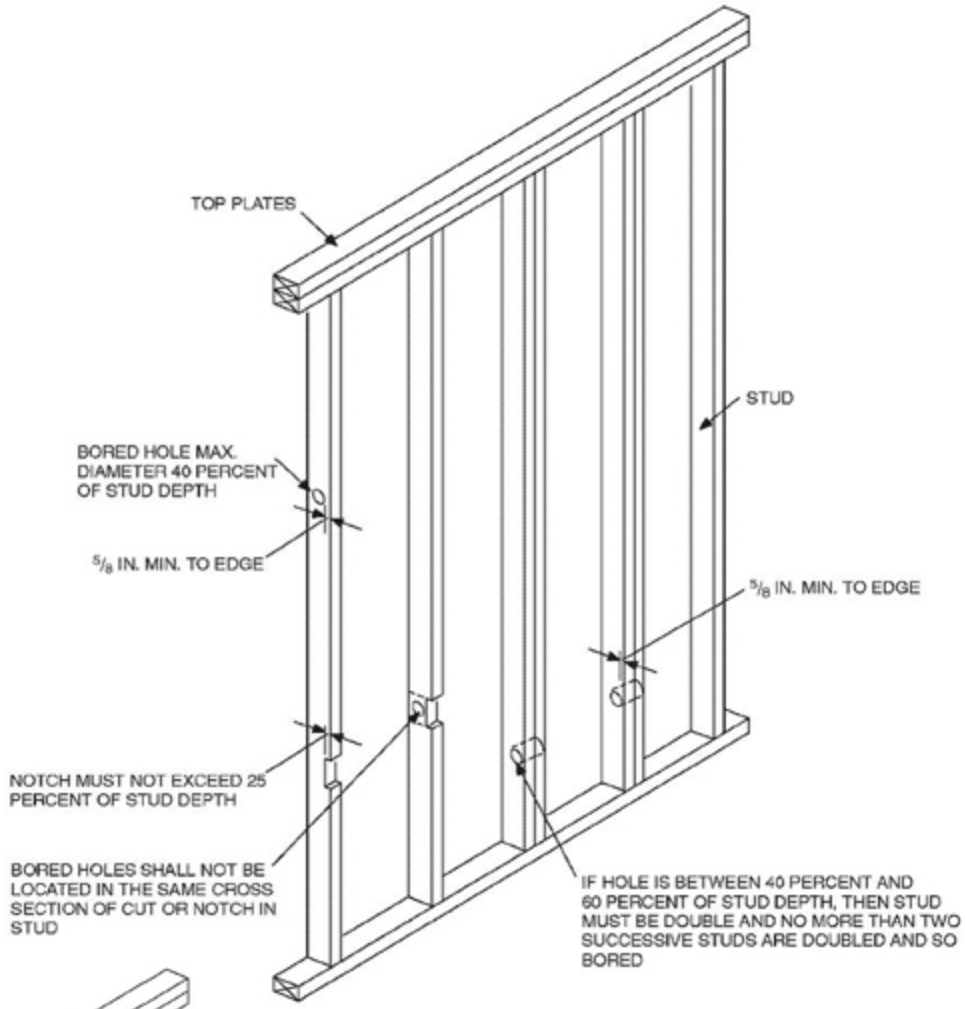

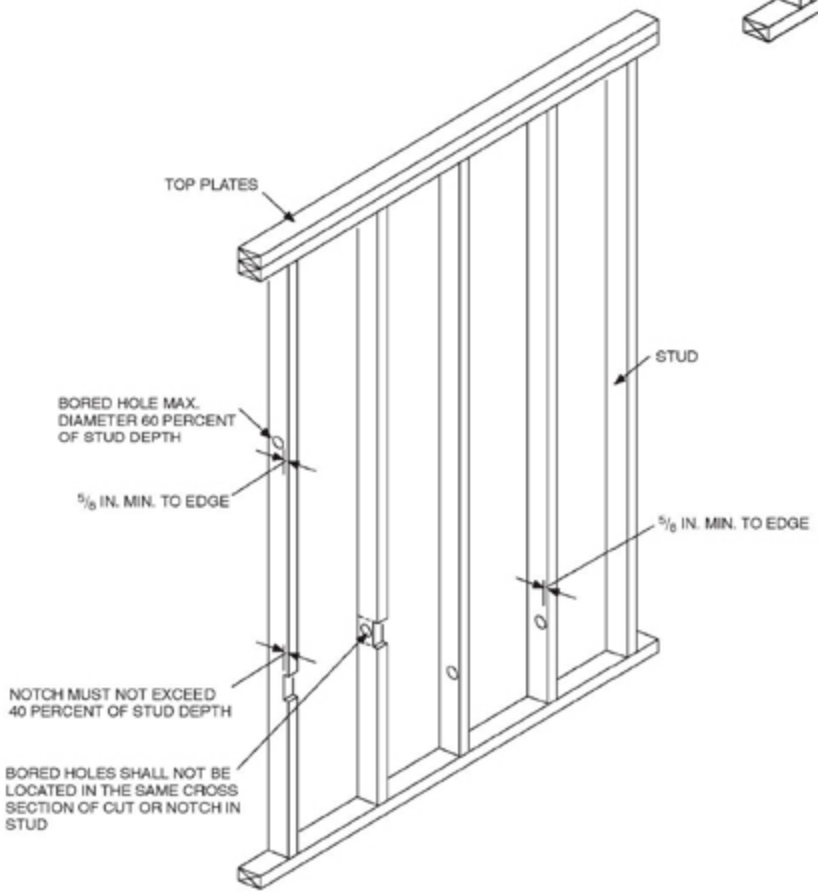

NOTCHING AND BORED HOLE LIMITATIONS FOR INTERIOR WALLS AND NONBEARING WALLS

NAIL ON FIN WINDOW FLASHING

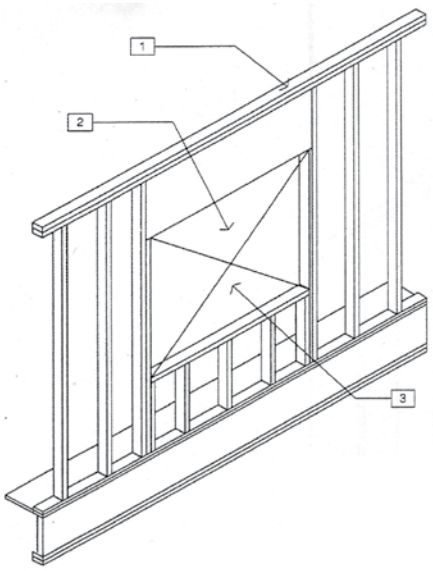

LEGEND
1. SQUARE & LEVEL FRAMING.
2. ROUGH WINDOW OPENING.
3. ROUGH FRAMED OPENING SUFFICIENTLY LARGER IN WIDTH & HEIGHT THAN THE ACTUAL FRAME DIMENSIONS OF THE WINDOW. TO ASSURE ADEQUATE CLEARANCE CONSULT THE WINDOW MANUFACTURER'S LITERATURE FOR THE RECOMMENDED ROUGH OPENING DIMENSIONS.

ROUGH WINDOW OPENING

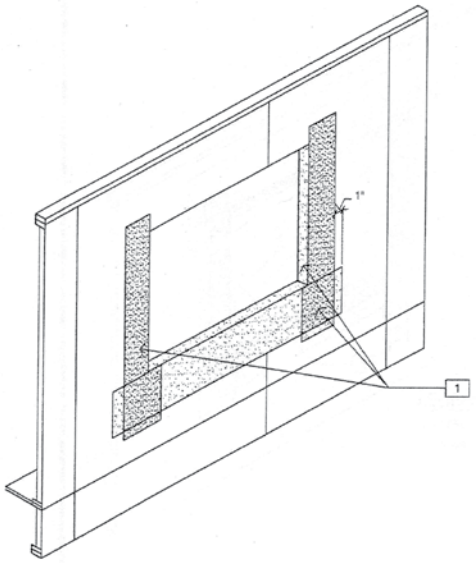

LEGEND
JAMB FLASHING FLUSH AT BOTH SIDES OF OPENING LEAVING FREE AT BOTTOM, (WRAP JAMB FLASHING INTO ROUGH OPENING AT RECESSED WINDOWS ONLY, SIMILAR AT SILL). EXTEND BEYOND SILL FLASHING ABOVE WHERE HEAD FLASHING WILL INTERSECT. LAP JAMB FLASHING OVER TOP SILL FLASHING. LEAVE PAPER FLASHING UNATTACHED FROM SILL DOWN.

JAMB FLASHING

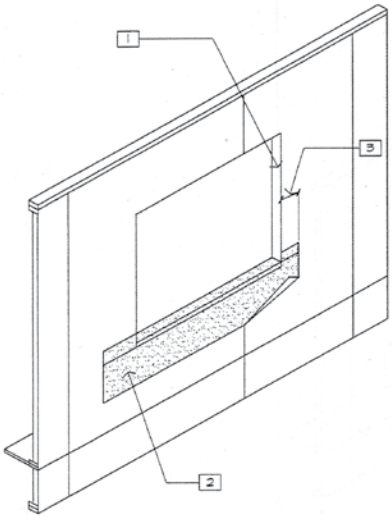

LEGEND
1. WALL SHEATHING (WHERE OCCURS), VERIFY SHEATHING EDGES FLUSH WITH FRAME OPENING AND COMPLETION OF STRUCTURAL NAILING & REINFORCEMENT BEFORE PROCEEDING.
2. APPLY 12" "MOISTOP" OR APPROVED EOUIVALENT SILL FLASHING HORIZONTALLY BELOW THE SILL. (WRAP FLASHING INTO ROUGH OPENING AT SILL & JAMB CONDITIONS TO PROTECT FRAMING. FASTEN THE TOP EDGE OF
THE SILL FLASHING TO THE FRAMING, BUT DO NOT FASTEN THE LOWER EDGE, SO0 WEATHER RESISTANT BUILDING PAPER APPLIED LATER MAY BE SLIPPED UP UNDERNEATH THE FLASHING IN WEATHER BOARD FASHION.
S. EXTEND "MOISTOP" OR APPROVED EQUIVALENT SILL FLASHING HORIZONTALLY 1" BEYOND VERTICAL JAMB FLASHING APPLIED LATER.

SILL FLASHING

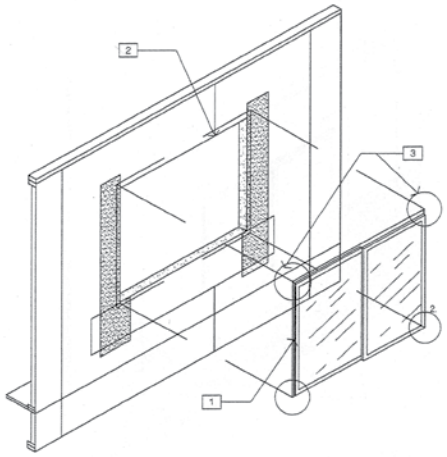

1. SHIM & ADJUST WINDOW TO ACHIEVE SQUARE PLUMB & LEVEL CONDITION. USE CORROSION RESISTANT FASTENERS. FASTEN WITHIN 10" AND NO CLOSER THAN 3" IN EACH DIRECTION FROM EVERY CORNER. SECURE WINDOW HEAD W/ 6d FASTENERS 1/2" ABV. TOP OF WINDOW FINISH. BEND NAIL O/ FLANGE FLAT. REFER TO MFG.'S INSTRUCTIONS REGARDING NAIL FIN ATTACHMENT.

2. TO SEAL THE WINDOW FRAME TO OPENING, APPLY CONTINUOUS SEALANT TO THE BACKSIDE OF THE MOUNTING FLANGE NEAR THE OUTER EDGE AND APPLY CONTINUOUS SEALANT TO PERIMETER OF OPENING AT A POINT TO ASSURE CONTACT WITH BACKSIDE OF MOUNTING FLANGE WITH IN 1/2" OF EDGE OF OPENING.

3. AFTER INSTALLATION SEAL ALL CORNERS OF MECHANICALLY JOINT FRAMES TO SEAL FRAME SEAM JUNCTURE.

WINDOW INSTALLATION

NAIL ON FIN WINDOW FLASHING

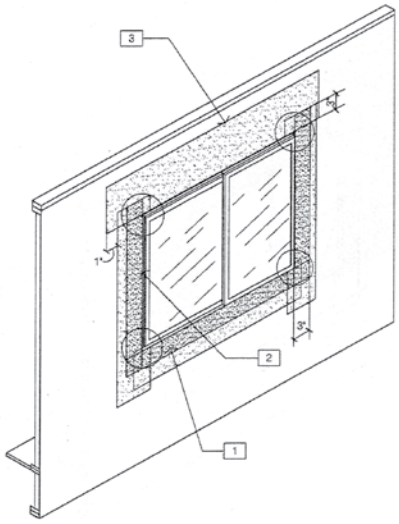

LEGEND
1. APPLY 6" SELF-ADHERING "E-2 SEAL" MEMBRANE OVER "MOISTOP" AND 3" BEYOND WINDOW FLANGE.
2. APPLY 6" "E-Z SEAL" MEMBRANE AT JAMBS OVER "MOISTOP". EXTEND 3" BEYOND WINDOW FLANGE.
3. APPLY 12" "E-Z SEAL" MEMBRANE AT HEADER OF WINDOW. EXTEND 1" BEYOND "MOISTOP".
4. APPLY FIRM PRESSURE TO SELF-ADHERING MEMBRANE TO ASSURE ADHERENCE TO WINDOW FINS.
5. CHECK ALL CORNERS FOR PROPER SEAL OF SELF-ADHERING MEMBRANE.

SELF ADHESIVE MEMB.

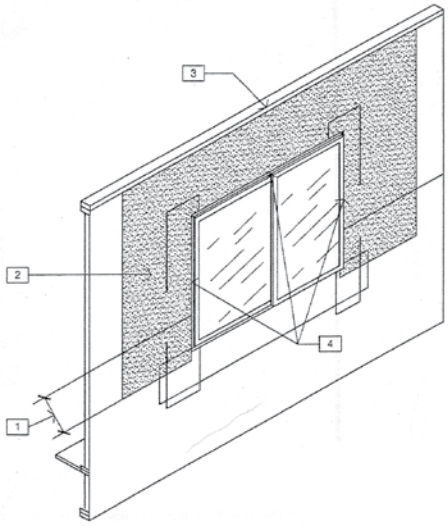

LEGEND
1. 6" MIN VERTICAL LAP FOR ALL HORIZONTAL & VERTICAL JOINTS IN BUILDING PAPER.
2. LAP SUBSEQUENT COURSES OVER "MOISTOP".
3. CARRY PAPER TO UPPER EDGE OF TOP PLATE
4. HOLD PAPER BACK 1" FROM WINDOW.

BUILDING- PAPER- SECOND COURSE

BUILDING PAPER - SECOND COURSE

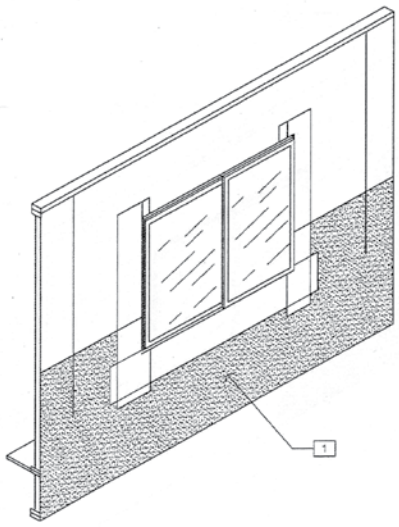

LEGEND
1. INSERT FIRST COURSE OF 60 MIN. PAPER UNDER "MOISTOP" AND STAPLE "MOISTOP"

BUILDING PAPER - FIRST COURSE

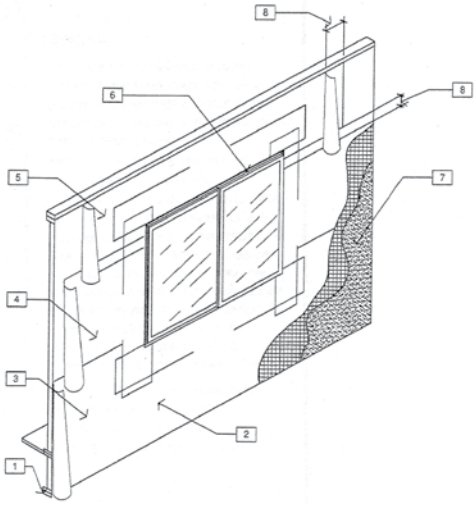

LEGEND
1. STUCCO WEEP SCREED, WHERE REQD.
2. INSTALL SECOND LAYER OF 60 MIN. PAPER OVER EVERYTHING, WHERE REQD
3. FIRST COURSE OF BUILDING PAPER. 18" IN HEIGHT.
4. SECOND COURSE OF BUILDING PAPER, 36-IN HEIGHT.
5. THIRD COURSE OF BUILDING PAPER, 36" IN HEIGHT
6. INSTALL WINDOW HEAD FLASHING PROTECTION LAYER LAPS OVER FLASHING FLANGE.
7. EXTERIOR WALL FINISH; INSTALL PER WALL FINISH MFG.'S RECOMMENDATION.
8. 6" VERTICAL HORIZONTAL LAPS.

TRIM FLASHING - PROTECTION COURSE

ROOF AND CEILING FRAMING

RAFTERS

Rafters must be framed directly opposite each other at the ridge and blocked over end bearing walls. The ridge board must be not less in depth than the plumb end of the rafter. Usually a ridge board one size bigger than the rafter will meet this requirement, but at some steeper pitches, a larger size may be required. Valley and hip rafters must be a minimum of 2X thickness and again not less in depth than the plumb end of the rafters.

RAFTERS TIES

Rafter ties that form a continuous tie between exterior walls are required on all roof framing. These ties may be the ceiling joists if parallel to the rafters or may be separate ties nailed to opposing rafters. Rafter tie spacing must not exceed four feet.

PURLINS

Rafter spans can be increased through the proper use of purlins as intermediate supports. Purlins must be supported by struts to bearing walls or properly designed beams. Purlins cannot be smaller than the supported rafter. 2 x 6 purlins may span a maximum of six feet. Struts used to support purlins may not be smaller than 2 x 4's. Struts must not exceed eight feet unbraced, and may not be installed at slopes lower than forty-five degrees from horizontal.

ROOF SHEATHING

Structural wood panel sheathing may be of intermediate or exterior grade except at exposed eaves where only exterior grade is permitted. Joints parallel to framing members must occur over framing members

CEILING FRAMING

Ceiling joists cannot be used to brace roof framing. Ceiling joists 2 x 6 and larger should be solidly blocked at ends unless nailed directly to rafters. Refer to the span tables for maximum allowable spans. Strongbacks are not given any credit when evaluating maximum span.

ATTIC VENTILATION AND ACCESS

Enclosed attics shall have cross ventilation. It is recommended that high (exhaust) and low (intake) ventilation be used. Where high and low ventilation is approximately equal, one square foot of ventilation for each three hundred square feet of attic area is required. Where high and low ventilation is not used one square foot per 150 square feet is required. Screen vents must be 1/4" mesh. Any attic with 30" or more of vertical height must be accessible through a minimum opening of 22" x 30".

ROOF COVERINGS

The City of San Bruno does not allow roof overlays. A complete tear off of all old roofing materials is required. Class B or better fire rating is required for roofing materials.

LOW SLOPE ROOFS

For roof slopes from 2 ½" vertical in 12" horizontal, up to 4" vertical in 12" horizontal, underlayment for shingles shall be a minimum of two layer applied as follows:

1. Starting at the eave, a 19-inch strip of underlayment shall be applied parallel with the eave and fastened.
2. Starting at the eave, a 36-inch wide strip of underlayment shall be applied overlapping successive sheets 19-inches and fastened.

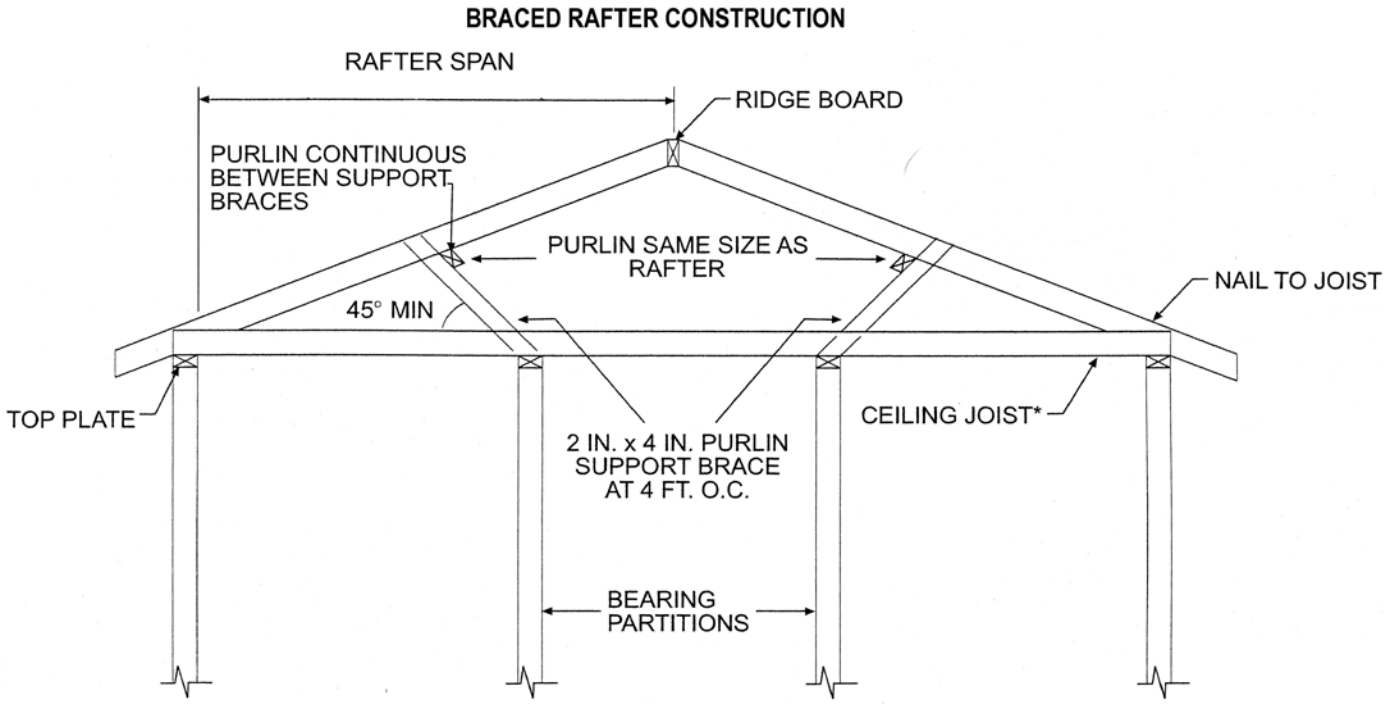

MAXIMUM ALLOWABLE SPANS - 2010 CALIFORNIA RESIDENTIAL BUILDING CODE

FLOOR JOISTS -- 40# LL - Residential living areas, 40 psf live load

	12" o.c.	16" o.c.	19.2" o.c.	24" o.c.
2x6 #2 DF	10' 9"	9' 9"	9' 1"	8' 1"
2x6 #1 DF	10' 11"	9' 11"	9' 4"	8' 8"
2x6 SS DF	11' 4"	10' 4"	9' 8"	9' 0"
2x8 #2 DF	14' 2"	12' 7"	11' 4"	10' 3"
2x8 #1 DF	14' 5"	13' 1"	12' 4"	11' 0"
2x8 SS DF	15' 0"	13' 7"	12' 10"	11' 11"
2x10 #2 DF	17' 9"	15' 5"	14' 1"	12' 7"
2x10 #1 DF	18' 5"	16' 5"	15'	13' 5"
2x10 SS DF	19' 1"	17' 4"	16' 4"	15' 2"
2x12 #2 DF	20' 7"	17'10"	16' 3"	14' 7"
2x12 #1 DF	22' 0"	19' 1"	17' 5"	15' 7"
2x12 SS DF	23' 3"	21' 1"	19' 10"	18' 5"

CEILING JOISTS -- 20# LL - Uninhabitahble attics with limited storage, 20 psf live load

	12" o.c.	16" o.c.	19.2" o.c.	24" o.c.
2x4 #2 DF	9' 10 "	8' 9"	8' 0"	7' 2"
2x4 #1 DF	10' 0"	9' 1"	8' 7"	7' 8"
2x4 SS DF	10' 5"	9' 6"	8'11"	8' 3"
2x6 #2 DF	14'10"	12'10"	11' 9"	10' 6"
2x6 #1 DF	15' 9"	13' 9"	12' 6"	11' 2"
2x6 SS DF	16' 4"	14'11"	14' 0"	13' 0"
2x8 #2 DF	18' 9"	16' 3"	14'10"	13' 3"
2x8 #1 DF	20' 1"	17' 5"	15'10"	14' 2"
2x8 SS DF	21' 7"	19' 7"	18' 5"	17' 1"
2x10 #2 DF	22'11"	19'10"	18' 2"	16' 3"
2x10 #1 DF	24' 6"	21' 3"	19' 5"	17' 4"
2x10 SS DF	N/A	N/A	23' 4"	20'11"

RAFTERS -- Roof live load 20 psf ceiling not attached to rafters. Dead load 20 psf.

	12" o.c.	16" o.c.	19.2" o.c.	24" o.c.
2x4 #2 DF	9' 10"	8' 6"	7' 9"	6' 11"
2x4 #1 DF	10' 6"	9' 1"	8' 4"	7' 5"
2x4 SS DF	11' 6"	10' 5"	9' 10"	8'11"
2x6 #2 DF	14' 4"	12' 5"	11' 4"	10' 2"
2x6 #1 DF	15' 4"	13' 3"	12' 2"	10'10"
2x6 SS DF	18' 0"	16' 0"	14' 7"	13' 1"
2x8 #2 DF	18' 2"	15' 9"	14' 4"	12' 10"
2x8 #1 DF	19' 5"	16' 10"	15' 4"	13' 9"
2x8 SS DF	23' 5"	20' 3"	18' 6"	16' 7"
2x10 #2 DF	22' 3"	19' 3"	17' 7"	15' 8"
2x10 #1 DF	23' 9"	20' 7"	18' 9"	16' 9"
2x10 SS DF	N/A	N/A	22' 7"	20' 3"

TABLE R602.3(1) FASTENER SCHEDULE FOR STRUCTURAL MEMBERS

ITEM	DESCRIPTION OF BUILDING ELEMENTS	NUMBER AND TYPE OF FASTENER[a, b, c]	SPACING OF FASTENERS
	Roof		
1	Blocking between joists or rafters to top plate, toe nail	3-8d ($2^1/_2$" × 0.113")	—
2	Ceiling joists to plate, toe nail	3-8d ($2^1/_2$" × 0.113")	—
3	Ceiling joists not attached to parallel rafter, laps over partitions, face nail	3-10d	—
4	Collar tie rafter, face nail or $1^1/_4$" × 20 gage ridge strap	3-10d (3" × 0.128")	—
5	Rafter to plate, toe nail	2-16d ($3^1/_2$" × 0.135")	—
6	Roof rafters to ridge, valley or hip rafters: toe nail face nail	 4-16d ($3^1/_2$" × 0.135") 3-16d ($3^1/_2$" × 0.135")	 — —
	Wall		
7	Built-up corner studs	10d (3" × 0.128")	24" o.c.
8	Built-up header, two pieces with $^1/_2$" spacer	16d ($3^1/_2$" × 0.135")	16" o.c. along each edge
9	Continued header, two pieces	16d ($3^1/_2$" × 0.135")	16" o.c. along each edge
10	Continuous header to stud, toe nail	4-8d ($2^1/_2$" × 0.113")	—
11	Double studs, face nail	10d (3" × 0.128")	24" o.c.
12	Double top plates, face nail	10d (3" × 0.128")	24" o.c.
13	Double top plates, minimum 24-inch offset of end joints, face nail in lapped area	8-16d ($3^1/_2$" × 0.135")	—
14	Sole plate to joist or blocking, face nail	16d ($3^1/_2$" × 0.135")	16" o.c.
15	Sole plate to joist or blocking at braced wall panels	3-16d ($3^1/_2$" × 0.135")	16" o.c.
16	Stud to sole plate, toe nail	3-8d ($2^1/_2$" × 0.113") or 2-16d $3^1/_2$" × 0.135")	— —
17	Top or sole plate to stud, end nail	2-16d ($3^1/_2$" × 0.135")	—
18	Top plates, laps at corners and intersections, face nail	2-10d (3" × 0.128")	—
19	1" brace to each stud and plate, face nail	2-8d ($2^1/_2$" × 0.113") 2 staples $1^3/_4$"	— —
20	1" × 6" sheathing to each bearing, face nail	2-8d ($2^1/_2$" × 0.113") 2 staples $1^3/_4$"	— —
21	1" × 8" sheathing to each bearing, face nail	2-8d ($2^1/_2$" × 0.113") 3 staples $1^3/_4$"	— —
	Wider than 1" × 8" sheathing to each bearing, face nail	3-8d ($2^1/_2$" × 0.113")	—
22		4 staples $1^3/_4$"	—
	Floor		
23	Joist to sill or girder, toe nail	3-8d ($2^1/_2$" × 0.113")	—
24	1" × 6" subfloor or less to each joist, face nail	2-8d ($2^1/_2$" × 0.113") 2 staples $1^3/_4$"	— —
25	2" subfloor to joist or girder, blind and face nail	2-16d ($3^1/_2$" × 0.135")	—
26	Rim joist to top plate, toe nail (roof applications also)	8d ($2^1/_2$" × 0.113")	6" o.c.
27	2" planks (plank & beam – floor & roof)	2-16d ($3^1/_2$" × 0.135")	at each bearing
28	Built-up girders and beams, 2-inch lumber layers	10d (3" × 0.128")	Nail each layer as follows: 32" o.c. at top and bottom and staggered. Two nails at ends and at each splice.
29	Ledger strip supporting joists or rafters	3-16d ($3^1/_2$" × 0.135")	At each joist or rafter

TABLE R602.3(1)—continued FASTENER SCHEDULE FOR STRUCTURAL MEMBERS

ITEM	DESCRIPTION OF BUILDING MATERIALS	DESCRIPTION OF FASTENER[b, c, e]	SPACING OF FASTENERS	
			Edges (inches)[i]	Intermediate supports[c, e] (inches)
Wood structural panels, subfloor, roof and interior wall sheathing to framing and particleboard wall sheathing to framing				
30	$^3/_8$" - $^1/_2$"	6d common (2" × 0.113") nail (subfloor wall)[j] 8d common ($2^1/_2$" × 0.131") nail (roof)	6	12[g]
31	$^5/_{16}$" - $^1/_2$"	6d common (2" × 0.113") nail (subfloor, wall) 8d common ($2^1/_2$" × 0.131") nail (roof)[f]	6	12[g]
32	$^{19}/_{32}$" - 1"	8d common nail ($2^1/_2$" × 0.131")	6	12[g]
33	$1^1/_8$" - $1^1/_4$"	10d common (3" × 0.148") nail or 8d ($2^1/_2$" × 0.131") deformed nail	6	12
Other wall sheathing[h]				
34	$^1/_2$" structural cellulosic fiberboard sheathing	$^1/_2$" galvanized roofing nail, $^7/_{16}$" crown or 1" crown staple 16 ga., $1^1/_4$" long	3	6
35	$^{25}/_{32}$" structural cellulosic fiberboard sheathing	$1^3/_4$" galvanized roofing nail, $^7/_{16}$" crown or 1" crown staple 16 ga., $1^1/_2$" long	3	6
36	$^1/_2$" gypsum sheathing[d]	$1^1/_2$" galvanized roofing nail; staple galvanized, $1^1/_2$" long; $1^1/_4$ screws, Type W or S	7	7
37	$^5/_8$" gypsum sheathing[d]	$1^3/_4$" glavanized roofing nail; staple galvanized, $1^5/_8$" long; $1^5/_8$" screws, Type W or S	7	7
Wood structural panels, combination subfloor underlayment to framing				
38	$^3/_4$" and less	6d deformed (2" × 0.120") nail or 8d common ($2^1/_2$" × 0.131") nail	6	12
39	$^7/_8$" - 1"	8d common ($2^1/_2$" × 0.131") nail or 8d deformed ($2^1/_2$" × 0.120") nail	6	12
40	$1^1/_8$" - $1^1/_4$"	10d common (3" × 0.148") nail or 8d deformed ($2^1/_2$" × 0.120") nail	6	12

For SI: 1 inch = 25.4 mm, 1 foot = 304.8 mm, 1 mile per hour = 0.447 m/s; 1ksi = 6.895 MPa.

a. All nails are smooth-common, box or deformed shanks except where otherwise stated. Nails used for framing and sheathing connections shall have minimum average bending yield strengths as shown: 80 ksi for shank diameter of 0.192 inch (20d common nail), 90 ksi for shank diameters larger than 0.142 inch but not larger than 0.177 inch, and 100 ksi for shank diameters of 0.142 inch or less.

b. Staples are 16 gage wire and have a minimum $^7/_{16}$-inch on diameter crown width.

c. Nails shall be spaced at not more than 6 inches on center at all supports where spans are 48 inches or greater.

d. Four-foot-by-8-foot or 4-foot-by-9-foot panels shall be applied vertically.

e. Spacing of fasteners not included in this table shall be based on Table R602.3(2).

f. For regions having basic wind speed of 110 mph or greater, 8d deformed ($2^1/_2$" × 0.120) nails shall be used for attaching plywood and wood structural panel roof sheathing to framing within minimum 48-inch distance from gable end walls, if mean roof height is more than 25 feet, up to 35 feet maximum.

g. For regions having basic wind speed of 100 mph or less, nails for attaching wood structural panel roof sheathing to gable end wall framing shall be spaced 6 inches on center. When basic wind speed is greater than 100 mph, nails for attaching panel roof sheathing to intermediate supports shall be spaced 6 inches on center for minimum 48-inch distance from ridges, eaves and gable end walls; and 4 inches on center to gable end wall framing.

h. Gypsum sheathing shall conform to ASTM C 1396 and shall be installed in accordance with GA 253. Fiberboard sheathing shall conform to ASTM C 208.

i. Spacing of fasteners on floor sheathing panel edges applies to panel edges supported by framing members and required blocking and at all floor perimeters only. Spacing of fasteners on roof sheathing panel edges applies to panel edges supported by framing members and required blocking. Blocking of roof or floor sheathing panel edges perpendicular to the framing members need not be provided except as required by other provisions of this code. Floor perimeter shall be supported by framing members or solid blocking.

DRYWALL

GENERAL

Drywall (sheetrock) is the interior finish most commonly used in residential construction. The following guidelines pertain to its application.

Gypsum wallboard shall not be installed until rough inspections are completed and exterior is weather protected.

When practical, wallboard should be applied first to the ceilings, and then to walls. Sheets should be brought into contact but not forced into place. Spaces between sheets should not exceed 1/4" and tapered edges should be placed next to each other when possible.

Cutouts for electrical outlets, pipes, fixtures or other small openings should be cut out neatly with a maximum clearance of 1/8". If there are any gaps exceeding 1/4", they must be filled with joint compound and drywall tape.

NAILING

Nails should be driven so that the head is in a small dimple formed by the last blow of the hammer. Take care not to fracture the board when nailing. Fractures of the wallboard caused by over driving must be corrected by additional nailing. Nails should be 3/8" from the edges, and nails on adjacent edges should be opposite each other. If you are using the nailing system, the nails should be spaced 7" on center on the ceilings and 8" on center on the walls. Approved screws may also be used to apply wallboard. Screws must be placed 3/8" from the end or edges of the board and spaced 12" on center. Screws must be used for fastening wallboard at pocket doors.

CORNERS

All reinforced corners must fit snugly against wallboard and should be nailed approximately 12" on center. All "L" edge metal trim should be nailed every 6". Paperback corner bead is acceptable if installed in accordance with the manufacturer's instructions.

DRYWALL IN SHOWER ENCLOSURES

Greenboard is not allowed where subject to direct water exposure (tubs or showers) or high humidity (saunas). Use cement, fiber-cement or glass mat gypsum backers as a base for wall tile in tub and shower areas.

DRYWALL IN FIRE RESISTIVE CONSTRUCTION

There are areas in residential construction where one-hour fire resistive construction is required. One area is the wall separating an attached garage from the living area, and another is enclosed useable space (walls and ceilings) under a stairway. A typical one-hour firewall is constructed as follows: 5/8" type "X" gypsum wallboard is nailed 7" on center to studs spaced 16" on center and at all edges. All gaps and penetrations must be taped or fire-caulked.

MINIMUM THICKNESS AND APPLICATION OF GYPSUM BOARD

THICKNESS OF GYPSUM BOARD (inches)	APPLICATION	ORIENTATION OF GYPSUM BOARD TO FRAMING	MAXIMUM SPACING OF FRAMING MEMBERS (inches o.c.)	MAXIMUM SPACING OF FASTENERS (inches)		SIZE OF NAILS FOR APPLICATION TO WOOD FRAMING[f]
				Nails[a]	Screws[b]	
Application without adhesive						
$^3/_8$	Ceiling[d]	Perpendicular	16	7	12	13 gage, $1^3/_4$″ long, $^{19}/_{64}$″ head; 0.098″ diameter, $1^1/_4$″ long, annular-ringed; or 4d cooler nail, 0.080″ diameter, $1^3/_8$″ long, $^7/_{32}$″ head.
	Wall	Either direction	16	8	16	
$^1/_2$	Ceiling	Either direction	16	7	12	13 gage, $1^3/_8$″ long, $^{19}/_{64}$″ head; 0.098″ diameter, $1^1/_4$″ long, annular-ringed; 5d cooler nail, 0.086″ diameter, $1^5/_8$″ long, $^{15}/_{64}$″ head; or gypsum board nail, 0.086″ diameter, $1^5/_8$″ long, $^9/_{32}$″ head.
	Ceiling[d]	Perpendicular	24	7	12	
	Wall	Either direction	24	8	12	
	Wall	Either direction	16	8	16	
$^5/_8$	Ceiling	Either direction	16	7	12	13 gage, $1^5/_8$″ long, $^{19}/_{64}$″ head; 0.098″ diameter, $1^3/_8$″ long, annular-ringed; 6d cooler nail, 0.092″ diameter, $1^7/_8$″ long, $^1/_4$″ head; or gypsum board nail, 0.0915″ diameter, $1^7/_8$″ long, $^{19}/_{64}$″ head.
	Ceiling[e]	Perpendicular	24	7	12	
	Wall	Either direction	24	8	12	
	Wall	Either direction	16	8	16	
Application with adhesive						
$^3/_8$	Ceiling[d]	Perpendicular	16	16	16	Same as above for $^3/_8$″ gypsum board
	Wall	Either direction	16	16	24	
$^1/_2$ or $^5/_8$	Ceiling	Either direction	16	16	16	Same as above for $^1/_2$″ and $^5/_8$″ gypsum board, respectively
	Ceiling[d]	Perpendicular	24	12	16	
	Wall	Either direction	24	16	24	
Two $^3/_8$ layers	Ceiling	Perpendicular	16	16	16	Base ply nailed as above for $^1/_2$″ gypsum board; face ply installed with adhesive
	Wall	Either direction	24	24	24	

Screws - Shall be long enough for the full-diameter portion to penetrate into wood framing not less than 5/8" and through metal framing not less than 1/8"

For SI: 1 inch = 25.4 mm.

a. For application without adhesive, a pair of nails spaced not less than 2 inches apart or more than $2^1/_2$ inches apart may be used with the pair of nails spaced 12 inches on center.

b. Screws shall be in accordance with Section R702.3.6. Screws for attaching gypsum board to structural insulated panels shall penetrate the wood structural panel facing not less than $^7/_{16}$ inch.

c. Where cold-formed steel framing is used with a clinching design to receive nails by two edges of metal, the nails shall be not less than $^5/_8$ inch longer than the gypsum board thickness and shall have ringed shanks. Where the cold-formed steel framing has a nailing groove formed to receive the nails, the nails shall have barbed shanks or be 5d, $13^1/_2$ gage, $^{15}/_8$ inches long, $^{15}/_{64}$-inch head for $^1/_2$-inch gypsum board; and 6d, 13 gage, $1^7/_8$ inches long, $^{15}/_{64}$-inch head for $^5/_8$-inch gypsum board.

d. Three-eighths-inch-thick single-ply gypsum board shall not be used on a ceiling where a water-based textured finish is to be applied, or where it will be required to support insulation above a ceiling. On ceiling applications to receive a water-based texture material, either hand or spray applied, the gypsum board shall be applied perpendicular to framing. When applying a water-based texture material, the minimum gypsum board thickness shall be increased from $^3/_8$ inch to $^1/_2$ inch for 16-inch on center framing, and from $^1/_2$ inch to $^5/_8$ inch for 24-inch on center framing or $^1/_2$-inch sag-resistant gypsum ceiling board shall be used.

e. Type X gypsum board for garage ceilings beneath habitable rooms shall be installed perpendicular to the ceiling framing and shall be fastened at maximum 6 inches o.c. by minimum $1^7/_8$ inches 6d coated nails or equivalent drywall screws.

RECOMMENDED FASTENERS FOR DRYWALL

Fastener lengths for gypsum to wood framing

Gypsum	Nails	Screws
1/2"	1 3/8"	1 1/8"
5/8"	1 1/2"	1 1/4"

Gypsum Board Fastener Spacing

Ceiling -	Nails 7"
	Screws 12"
Walls -	Nails 8"
	Screws 12"

Single nailing

PERPENDICULAR CEILING APPLICATION

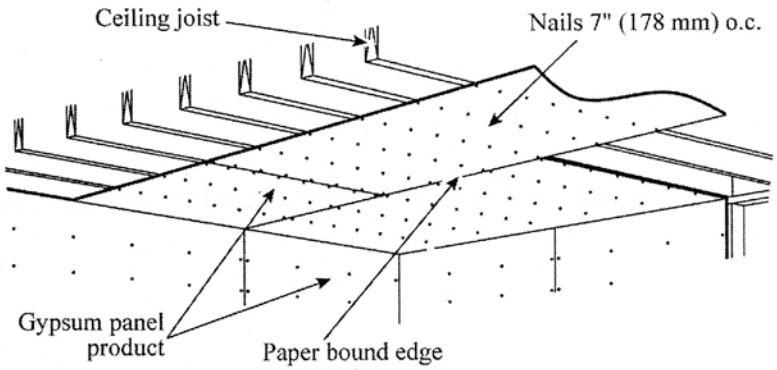

PARALLEL CEILING APPLICATION

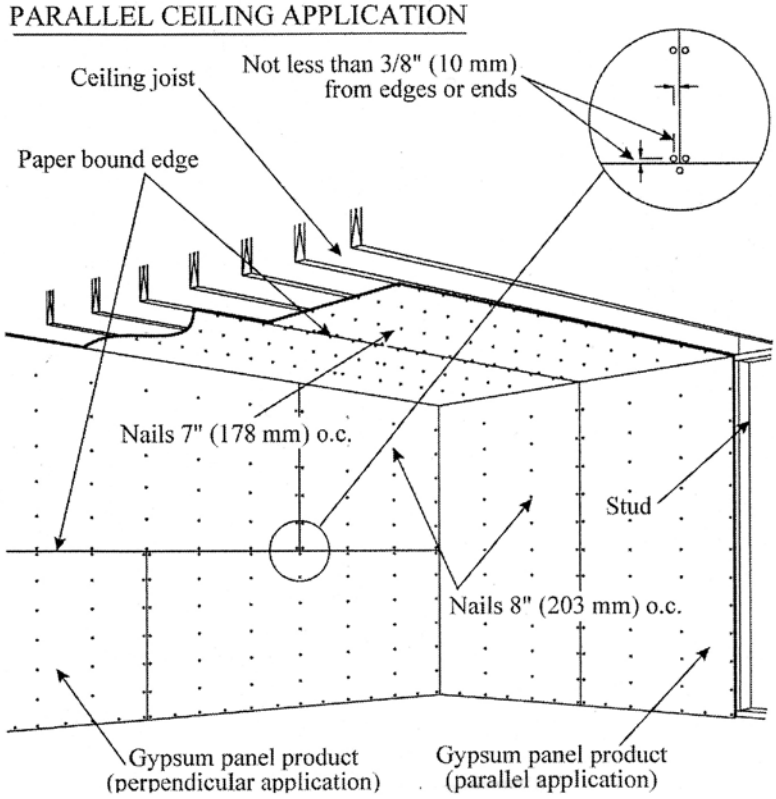

CALIFORNIA MECHANICAL CODE

GENERAL REQUIREMENTS FOR MECHANICAL EQUIPMENT

PROHIBITED LOCATIONS FOR FUEL BURNING APPLIANCES

In general, fuel-burning appliances can't be installed in bedrooms, bathrooms or closets, or any room or compartment, which opens directly into any of these. However, there are some exceptions.

Exceptions

1) This doesn't apply to direct vent appliances, which get combustion air from and vent directly to the outside, usually through a wall.
2) Vented appliances such as wall furnaces and gas fireplaces may be installed in these rooms if the rooms contain at least 50 cubic feet of volume for each 1000 Btu's of fuel input.
3) A fireplace may be installed in a bedroom or bathroom of any size if it has a listed method of getting its combustion air from outside the building.
4) A central furnace compartment may have access through a bedroom or bathroom if all combustion air is obtained from outside the building and the compartment is accessed through a tight-fitting gasketed door with a closer.

ELECTRICAL REQUIREMENTS

Each piece of mechanical equipment must have an electrical disconnect within sight and a 110V receptacle within 25' on the same level as the equipment. Lighting controlled by a switch at the access opening must also be provided for interior mechanical equipment, including attic and underfloor installations.

ACCESS AND WORKING SPACE

Rooms and compartments containing mechanical equipment must have a door at least 24" wide and big enough to remove the equipment. When the door is open, the front or service side of the equipment must have a clear working space of 30" wide, 30" deep, and 30" high or the height of the equipment, whichever is greater.

Attic equipment must be accessible by an opening at least 22" x 30" and big enough to remove the equipment. The passageway from the access opening to the equipment must be at least 30" wide and 30" high, and provided with continuous solid flooring at least 24" wide. A level working platform at least 30" square is required at the front or service side of the equipment. This platform may be omitted if the equipment can be serviced and removed from a ladder in the access opening.

Access and working space requirements for underfloor equipment are the same as attic equipment except that the passageway need not be provided with flooring.

SUPPORT OF EQUIPMENT

All mechanical equipment must be supported against vertical and horizontal movement in accordance with the engineering provisions of the Building Code. This is sometimes a problem with attic furnace installations, where the unit is not rigidly attached to the structure. Lateral bracing must be provided, typically straps running at a 45° angle from each corner of the unit to rigid framing members and tight enough to prevent horizontal movement. Concerns about vibration must be addressed with isolation devices, not by omitting required supports. The rafters or trusses must also be designed to handle the additional weight of the equipment.
"Piping, electrical conduit, ductwork, vents and the like shall not be used to provide support or restraint of equipment."

ELEVATION OF IGNITION SOURCE

Equipment that has a flame generates a spark or uses a glowing ignition source open to a garage in which it is installed must be elevated at least 18 inches above the floor. Equipment enclosed in a separate compartment having access only from outside of the garage may be installed at floor level, providing the required combustion air is not taken from the garage. **Water heaters listed as flammable vapor ignition resistant can be installed at floor level.**

CRASH BARRIERS

Equipment regulated by the Mechanical Code must be protected when placed in the drive path directly in line with a vehicle or if outdoors and subject to vehicular impact. This is usually done with one or more 4" trade size steel pipe bollards, embedded at least 24" into concrete, and 36" above grade.

HEATING AND COOLING SYSTEMS

COMBUSTION AIR

Permanent openings must be provided to supply combustion air to most fuel-burning appliances. Exceptions are direct-vent appliances, listed cooking appliances, and domestic clothes dryers.

An adequate supply of combustion air can be obtained from infiltration into a building of ordinary tightness if the volume of the room containing the appliance has at least 50 cubic feet of volume for each 1000 BTU's of fuel input. Hallways or other rooms, which are permanently open to the room containing the appliance, may be included in the volume calculation. Doors are not permanent openings.

If the volume of the room is not sufficient, all or part of the combustion air must be provided from another source. This includes permanent openings to another part of the building that has adequate volume, and openings or ducts directly to the outside or to accessible attics or underfloor spaces if they are adequately vented to the outside. If outside air must be used, the room or space containing the appliance becomes unconditioned space and must be separated from conditioned space in the building with insulated walls, weather-stripped doors, etc. This can be done by installing the appliance in a small compartment.

Outside combustion air can be provided by openings directly through walls, floors or ceilings, or by ducts. Two openings or ducts are generally required, one within 12" of the ceiling and one within 12" of the floor. If all combustion air is taken from outside the building, it may be provided through a single opening or duct within 12" of the ceiling.

If a duct is used to supply combustion air to the top of the enclosure, it must extend horizontally or upwards to the source of air. A duct supplying air to the bottom of the enclosure can run in any direction. Upper and lower ducts must be completely separate to the source of combustion air.

If permanent openings are used to obtain combustion air from another part of the building, they must each have 1 square inch for each 1000 BTU's of fuel input or 100 square inches, whichever is more.

If combustion air is being taken from outside or from the attic or underfloor space, each opening or vertical duct must have at least 1 square inch for each 4000 BTU's of fuel input. Horizontal ducts must have at least 1 square inch for each 2000 BTU's of fuel input. If a single upper opening or duct is being used, it must have at least 1 square inch for each 3000 BTU's of fuel input.

VENTS AND CHIMNEYS

Unvented fuel-burning appliances used for space heating are prohibited in residences.

Single wall pipe may be used only as a connector between an appliance and its vent or chimney and only in an exposed location. It can't be used in an attic, or in any concealed space. When used with residential gas appliances, it must be kept at least 6" from combustible materials and for woodstoves at least 18". All joints in single wall connectors must be fastened with sheetmetal screws or rivets, including the connection to the chimney or vent.

Concealed portions of vents and chimneys, other than masonry or concrete chimneys, must be constructed with listed pipe and fittings and must maintain the listed clearance from combustibles. In the case of gas appliances, listed pipe and fittings will be double-wall, or B-vent and generally require 1" clearance from combustibles. For woodstoves, a variety of listed chimney systems are available. These generally require 2" clearance from combustibles. Requirements for the installation of all these factory-made systems are found in the manufacturer's installation instructions, not in the codebooks.

Pitch is important in gravity venting systems, since the tendency of heat to rise makes them work. If too much of the pipe is too flat, the system will stall. Connectors may be as flat as 1/4" rise per foot, but must be as short as possible. Beyond the connector, no part of a gas vent can be flatter than 60° from vertical. But the total horizontal run of connector and vent must not exceed 75% of the total vertical rise. Stated another way, the vent system must be more vertical than horizontal. This is sometimes a problem when people want all the vents toward the back of the roof where they can't be seen from the street. If an appliance is too far toward the front of the house, this may not be possible.

Gravity-type venting systems, other than a Type BW system or a venting system, which is an integral part of a listed appliance, must extend at least 5 feet above the appliance vent collar. A Type BW vent serving a wall furnace must extend at least 12' above the bottom of the furnace.

Since gas vents must terminate at least 8' from any wall or other vertical surface, they are normally extended above the (highest) roof, clear of all walls. The termination must be at least 3' above or 10' horizontally from any forced air intake.

CONDENSATE

Condensing appliances must be vented in accordance with the manufacturer's installation instructions.
Liquid condensate from condensing appliances and cooling coils must be piped to an approved plumbing fixture or disposal area. Such piping must be no smaller than the drain pan connection on the approved appliance, must be corrosion resistant (normally PVC) and sloped at least 1/8" per foot. When condensate is generated above usable space, a separate overflow drain must be provided, sloped at least 1/8" per foot, and discharging at a "readily observable" location. An example of such a location is directly above a door or window. The purpose of locating the outlet in this manner is to alert the building occupant that something is wrong if the primary drain becomes clogged.

HEATING DUCT SYSTEMS

Ducts must be installed at least 4" above earth. This applies to metal ducts and flexible ducts. Supports must be at least 1 1/2" wide and be placed at intervals recommended by the manufacturer, but no more than 4' apart. Ducts in an underfloor area must not obstruct access to any part of the crawl space.

Risers must be constructed of metal in duct systems serving more than two stories.

WALL FURNACES

When wall furnaces are installed in existing buildings, the wall on one side of the vent must be completely opened for installation and inspection. The wall cavity containing the vent must be free of obstructions, and the plates at the top of the cavity must be cut flush with the studs.

The top of the wall in the story containing the furnace must have ceiling plate spacers, which allow ventilation into the attic or wall cavity above. The top of any walls above the story containing the furnace must have fire stop spacers, which close the opening around the pipe. Both types of spacers must be listed parts of the venting system.

If the story containing the furnace has an attic above with sufficient height, a sheetmetal sleeve the size of the wall cavity must extend from the top of the wall cavity to a point above the attic insulation. But it must keep back from the roof sheathing at least 2" to allow adequate air circulation.

If the story containing the furnace has an attic above without sufficient height to provide adequate ventilation of the wall cavity, a ventilated roof flashing or a ventilation opening in the wall directly above the furnace and no more than 12" from the ceiling may provide ventilation.

VENT TERMINATION ABOVE ROOF

ROOF SLOPES	FEET-INCHES
Flat to 6/12	1-0
Over 6/12 to 7/12	1-3
Over 7/12 to 8/12	1-6
Over 8/12 to 9/12	2-0
Over 9/12 to 10/12	2-6
Over 10/12 to 11/12	3-3
Over 11/12 to 12/12	4-0

WOOD-BURNING STOVES AND FIREPLACES

Woodstove chimneys must terminate in accordance with the manufacturer's installation instructions, generally 3' above the point of penetration and 2' above any part of the building within 10'. Wood stoves and factory-built wood-burning fireplaces must be installed according to the manufacturer's installation instructions. Wood stoves usually have a specification plate attached to the back that gives the required clearances from combustibles and floor protection. If no plate is present and no installation instructions are available, the stove cannot be installed in the City of San Bruno.

Bay Area Air Quality Management has set regulations for any permanently installed wood-burning device installed indoors in new construction or remodel be any of the following:

- A U.S. EPA Phase II certified wood burning device
- A pellet fueled device
- Listed on the Air District's list fo approved devices.

Conventional Fireplaces are no longer permitted. Gas fueled or electric powered fireplace devices are allowed. A list of approved wood burning devices can be found at: **www.baaqmd.gov/pio/wood_burning/index.htm**.

EXHAUST SYSTEMS

Exhaust ducts for bathroom fans, range hoods, and clothes dryers must terminate outside of the building at least 3' from an openable window, door or property line. A backdraft damper must be provided.

Range hood exhaust ducts must be of metal and have smooth interior surfaces, flexible type ducting is not allowed.

Clothes dryer ducts must be of metal and have smooth interior surfaces, except that a maximum 6' length of flexible connector may be used within the room or space containing the dryer. Unless the manufacturer's installation instructions say otherwise, 14' of duct with two 90° elbows is the maximum length allowed. Two feet of length must be deducted for each elbow in excess of two. Joints in dryer ducts must not be connected with sheetmetal screws or other fasteners, which will obstruct the flow.

When a compartment or space is provided for a dryer, an exhaust duct must be provided. If the dryer is located in a confined space, a permanent opening of at least 100 square inches must be provided for makeup air.